734N Series Access Control Modules

INSTALLATION AND PROGRAMMING GUIDE

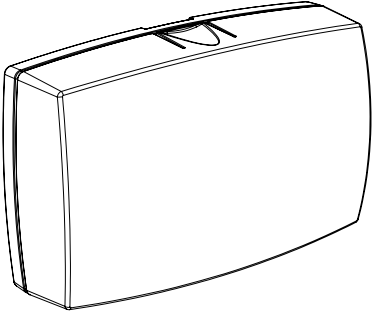

TABLE OF CONTENTS

About the 734N Series 1
Power Supply 1
Zone Terminals 1
Annunciators 1
Indicator LEDs 1
Form C Relay 2
Programming Connection 2
Wiegand and OSDP Reader Support 2
Local Event Storage 2

PCB Features 3

Install the 734N Series Module 4
Mount the 734N 4
Wire the Access Control Lock 5
Isolation Relay (optional) 8
Install the 333 Suppressor 9
Wire the Zone Terminals 10
Connect a Wiegand Card Reader 12
Connect an OSDP Card Reader 15
Network Connection 21
Set the 734N Address 22
Connect the Power Supply 24

Program the Panel 25
Device Setup 25
Device Number 25
Device Name 25
Device Type 26
Communication Type 26

Program the 734N Series Module 27
734N Menu 28
Programmer Menu 28
Initialization Options 29
Initialize Communication 29
Initialize Access 29
Communication Menu 30
734N Device Number 30
734N DHCP 30
734N IP Address 30
Subnet Mask 30
Gateway Address 31
Panel IP Address 31
Panel IP Port 31
734N Passphrase 31

Access Options 32
Reader Protocol Type *32*
Activate Zone 2 Bypass *34*
Activate Zone 3 Request to Exit *36*
Activate Onboard Speaker *37*
Card Formats *37*
Require Site Code *40*
Number of User Code Digits *41*
Card Format Added/Changed (Custom Format) *42*
No Communication with Panel *42*
Stop 43

Test the 734N Series Module 44
734N Menu 44
Diagnostics Menu *44*
Zone Status Display *45*

Compatibility 46
Public Card Formats 47
Readers and Credentials 48

Product Specifications 50

Compliance Listing Specifications ... 52
UL Access Control 52
ULC Commercial Burglary (XR150/XR550 Series Panels) 54

734N Series Network Specifications 55

Certifications 57
Underwriters Laboratory (UL Listed) 57

ABOUT THE 734N SERIES

The 734N and 734N-POE Access Control Modules allow you to add IP network access control capability to XR150/XR550 and XT75 panels using proximity, credential, or mag-stripe card readers. The modules also allow you to use the powerful built-in access control capability of DMP Panels.

Note: The 734N are not compatible with DMP 763 Wi-Fi Modules when using an XR or XT75 panel.

Power Supply

734N Series modules operate at 12/24 VDC from the power supply supporting a door's magnetic lock or door-strike. The 734N-POE can also be powered from POE.

Warning: To avoid the risk of equipment damage, do not exceed 750 mA total output current for zones connected to the module.

Zone Terminals

Four input zones are provided to allow connection of nearby burglary devices.

Annunciators

An onboard programmable piezo provides local annunciation at the module. You can also connect a variety of switched ground annunciators to the module for remote annunciation.

Indicator LEDs

734N Series modules provide three indicator LEDs:

- RELAY (red) turns on for the same duration as the door strike relay.
- WIEGAND (yellow) turns on for one second to indicate receipt of valid input.

Form C Relay

The 10 Amp Form C relay draws up to 35 mA of current. Refer to “Wire the Access Control Lock” and “Isolation Relay (optional)” in this document for more information.

Programming Connection

The modules also provide a keypad programming connection that allows you to use a standard DMP LCD keypad for initial setup. Programming can be completed using a keypad connected to the module or from XR150/XR550 or XT75 panels.

Wiegand and OSDP Reader Support

The 734N Series supports both Wiegand and OSDP card readers. For information on compatible readers, refer to “Readers and Credentials”. OSDP support requires 734N/734N-POE modules with Version 104 (12/9/19) and Hardware Level 103.

Local Event Storage

When communication is lost with the panel, 734N and 734N-POE Access Control Modules store access granted events locally in module memory. When communication is reestablished, stored events are sent and synced with panel events, then inserted into the event buffer according to the actual time when they occurred. To enable local event storage, **CARD FORMAT** must be set to **DMP** or **CUSTOM** and **NO COMM WITH PNL** must be set to **SITE** or **ANY**.

Local Event Storage requires 734N/734N-POE modules with firmware Version 105 or higher, along with XR Series firmware Version 202 or higher.

PCB FEATURES

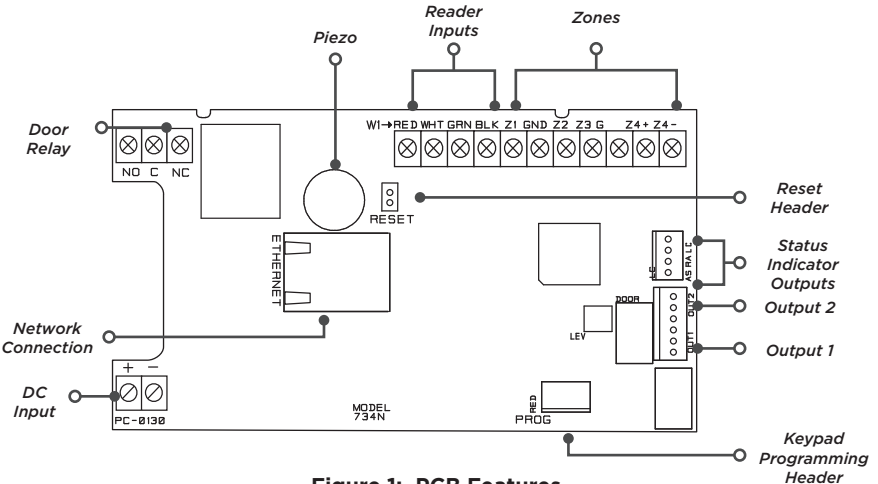

Figure 1: PCB Features

INSTALL THE 734N SERIES MODULE

1 *Mount the 734N*

The module comes in a high-impact plastic housing that you can mount directly to a wall, backboard, or other flat surface.

For easy installation, the back and ends of the 734N housing have wire entrances. The back also contains multiple mounting holes that allow you to mount the module on a single-gang switch box. DMP recommends mounting the 734N near the protected door. Refer to Figure 2 for mounting hole locations on the housing base.

1. Remove the PCB from the plastic housing by loosening the clips on one side and gently lifting it out of the housing base.
2. Insert the included screws in the desired mounting hole locations and tighten them to secure the housing to the surface.
3. Reinstall the PCB in the housing base.

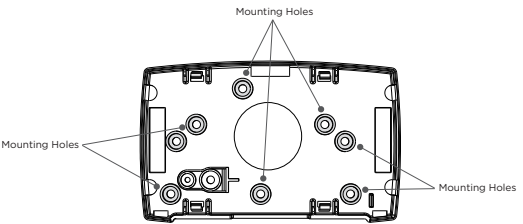

Figure 2: Mounting Hole Locations

2 *Wire the Access Control Lock*

The module provides a Form C (SPDT) relay for controlling locks and other electronically-controlled barriers. The three relay terminals marked NO C NC allow you to connect the device wiring to the relay for module control.

When the 734N Series module is powered with a 12/24 V power supply, the device can power an electric strike, up to 750 mA. See Figure 3 and Figure 4 for typical magnetic lock and door strike wiring. The 734N-POE can also be powered with POE. See Figure 5 for POE door strike wiring.

The Form C relay draws up to 35 mA of current and contacts are rated for 10 Amps (resistive) at 12/24 VDC. When connecting multiple locks to the Form C relay, the total current for all locks cannot exceed 10 Amps. If the total current for all locks exceeds 10 Amps, problems may arise and an isolation relay may be needed. See “Isolation Relay (optional)” for more information.

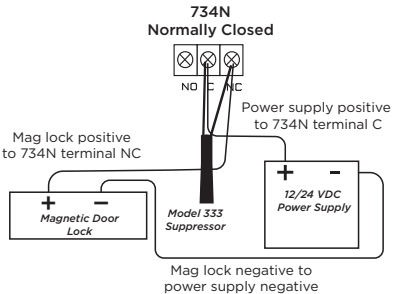

Figure 3: Typical Magnetic Lock Wiring

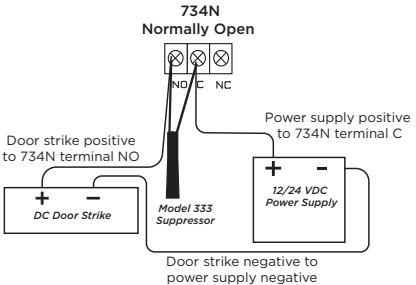

Figure 4: Typical Door Strike Wiring

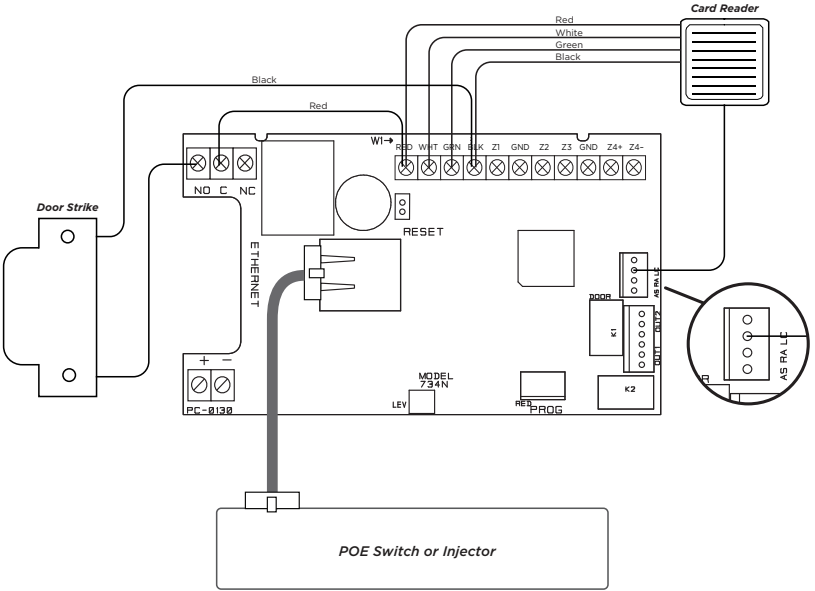

Figure 5: Typical Door Strike Wiring with POE (734N-POE only)

3 *Isolation Relay (optional)*

The Form C relay can control a device that draws less than 10 Amps of current. If a device draws more than 10 Amps of current, or the sum of all devices controlled by the Form C relay exceeds 10 Amps, an isolation relay must be used. Refer to Figure 6 and Figure 7 for isolation relay wiring.

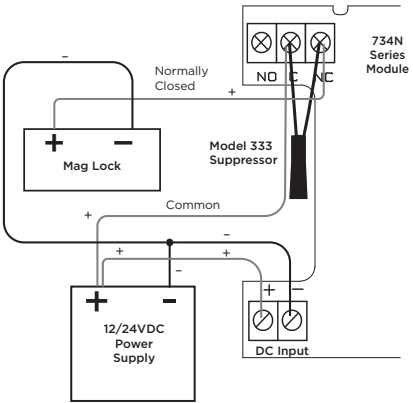

Figure 6: Magnetic Lock with an Isolation Relay

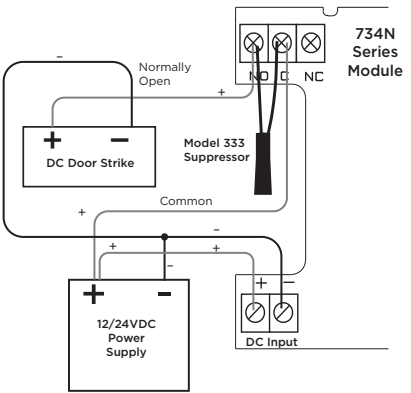

Figure 7: Door Strike with an Isolation Relay

4 *Install the 333 Suppressor*

Use the included 333 suppressor with the 734N Series module to suppress any surges caused by energizing a magnetic lock or door strike.

Install the 333 across the module's C (common) and NO (normally open) or NC (normally closed) terminals.

If the device being controlled by the relay is connected to the NO and C terminals, install the suppressor on the NO and C terminals.

Conversely, if the device is connected to the NC and C terminals, install the 333 Suppressor on NC and C terminals.

The suppressor wire is non-polarized. Install the suppressor as shown in Figure 8.

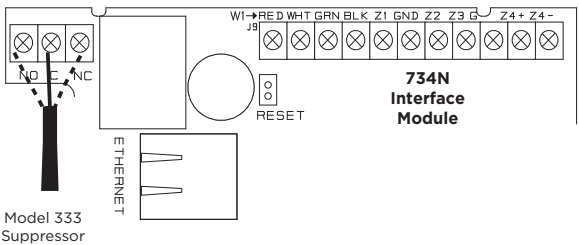

Figure 8: 333 Suppressor Installation

5 *Wire the Zone Terminals*

Terminals 5 through 9 connect grounded zones 1 through 3. These zones have a grounded side and cannot be used for fire-initiating devices. Zones 2 and 3 can also be used for access control with Zone 2 providing a bypass option and Zone 3 providing Request to Exit functionality. Zone 4 terminals provide a non-powered Class B, Style A zone.

Use the supplied DMP Model 311 1k Ohm End-of-Line resistors on each zone. Refer to the panel programming guide for programming instructions. See Figure 9 for more information on wiring the zone terminals.

Auxiliary Outputs 1 & 2

The module controls Auxiliary Outputs 1 and 2 when the Activate Zone 2 Bypass programming option is enabled and the Zone 2 Bypass Time is set. When the door contact (zone 2) is opened while the door strike is activated, the Zone 2 Bypass Time starts. If the door has not closed at the end of the timer, Aux Output 1 is turned on and the timer starts again. If the door is still open at the end of the second timer, Aux Output 2 is turned on. Aux Outputs 1 and 2 turn off when the door contact is closed. Use the Model 431 Relay Harness for connection of Output 1 and Output 2.

Zone #	Recommended Device	Residential Fire Device?
1	Any burglary device	No
2	Door contact	No
3	REX (PIR or Button)	No
4	Any Device	No

Table 1: 734N Zone Uses

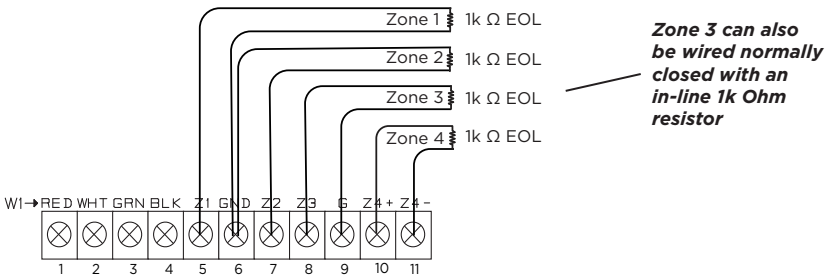

Figure 9: Zone Terminal Wiring

6a *Connect a Wiegand Card Reader*

The 734N Series module provides direct 12/24 VDC, 200 mA output to the reader on the Red terminal connection. Figure 10 shows a reader with wire colors RED, WHT, GRN, and BLK connecting to Terminals 1, 2, 3, and 4.

The green wire carries Data Zero (D0), and the white wire carries Data One (D1). The red wire connects 12/24 VDC, 200 mA maximum power and the black wire is ground.

The wire colors may be different depending on the reader being installed. Refer to the literature provided with the reader for wire coding, wire distance, cable type (such as shielded), and other specifications.

Wiegand Status Indicator Outputs
Terminals 5, 6, and 7 provide connections for Remote LED Control, Remote Annunciation, and Armed Status indicators.

LC (Remote LED Control)
Remote LED Control provides an unsupervised switched ground for a visual indicator that turns on when the relay activates. Connect the wire from the LC Terminal to an LED. The LED turns on for the duration the door strike relay is on. HID readers optionally provide a connection for LED reader control.

LC Wire Color	LED Color
Orange	Green
Brown	Red

RA (Remote Annunciation)
Remote Annunciation provides an unsupervised switched ground for a remote annunciator that turns on when the Zone 2 Bypass timer expires. Connect the wire from the RA Terminal to a remote annunciator. The remote annunciator silences when the RA restores. The remote annunciator (RA) switched ground operates even if the speaker is programmed not to operate.

AS (Armed Status)
Armed Status provides an unsupervised switched ground for a visual or audible armed status indicator that turns on when the burglary areas are armed, such as SYSTEM ON or ALL SYSTEM ON. Connect a wire from the AS Terminal to an armed status indicator.

Caution: Status indicator outputs support a maximum of 100 mA per terminal. Exceeding the maximum rating on LC, RA, or AS terminals can damage equipment.

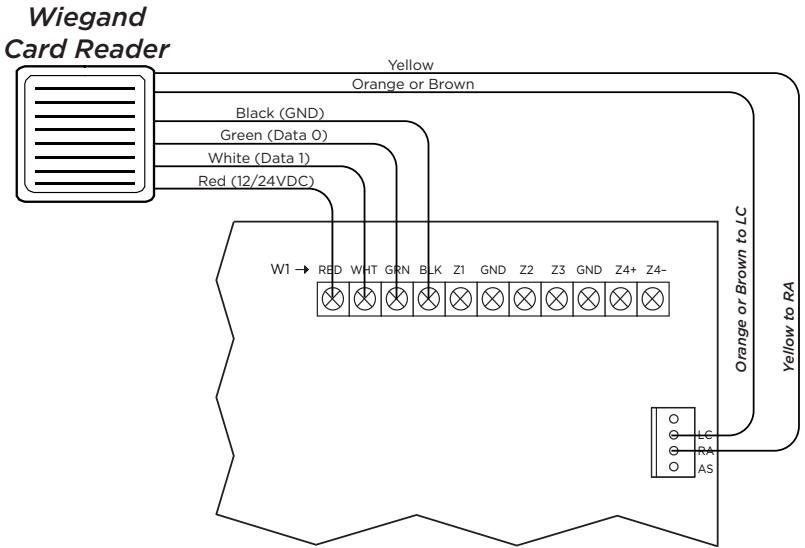

Figure 10: Wiegand Card Reader Wiring

6b *Connect an OSDP Card Reader*

The 734N Series provides 12/24 VDC, 200 mA power to the reader on the RED terminal connection and two-way data transmission on the GRN and WHT connection. Only one OSDP reader can be connected to a module.

Use 24 AWG or larger two conductor RS-485 cable to connect a reader to module terminals. For data transmission, connect the A (485 –) wire to the GRN terminal and the B (485 +) wire to the WHT terminal. For reader power, connect the red (DC +) wire to the RED terminal and the black (DC –) wire to the BLK terminal. Refer to Figure 11.

Wire colors may be different depending on the reader. Refer to literature provided with the reader for wire coding, distance, and other specifications.

Note: OSDP card readers require 734N Series Access Control modules with Version 104 (12/9/19) and Hardware Level 103.

OSDP Reader LED Operation

OSDP readers connected to 734N Series modules provide visual indication of relay condition, connection type, and encryption status with a red and green LED. Enable reader LED operation in **LED CONTROL**.

If enabled, the reader LED is turned on and operates the same as a Wiegand reader LED, lighting green when the module relay activates. Visual indication for connection and encryption status functions as follows:

- **Fast blink (50 ms interval)**—Connection secure, encrypted with 128-bit AES and your custom secure key.
- **Slow blink (100 ms interval)**—Connection encrypted with the default SIA secure key.
- **None**—Connected, but not secure or encrypted.

If disabled, the reader LED is turned off and does not operate in any condition.

OSDP Reader Annunciation

OSDP readers connected to 734N Series modules provide audible indication of card reads. Enable reader annunciation in **BUZZER CONTROL**.

If enabled, the reader's internal annunciator follows normal RA terminal operation.

If disabled, the reader's internal annunciator will beep once when a credential is presented.

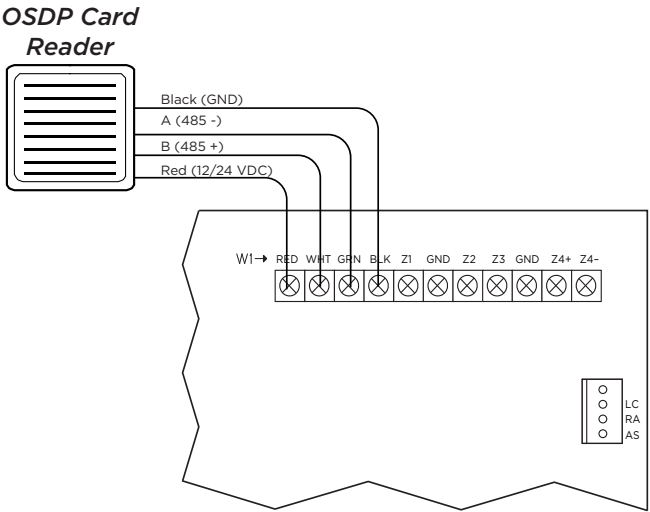

Figure 11: OSDP Card Reader Wiring

OSDP Status Indicator Outputs

Terminals 6 and 7 provide connections for Remote Annunciation and Armed Status indicators.

RA (Remote Annunciation)

Remote Annunciation provides an unsupervised switched ground for a remote annunciator that turns on when the Zone 2 Bypass timer expires. Connect the wire from the RA Terminal to a remote annunciator. The remote annunciator silences when the RA restores. The remote annunciator (RA) switched ground operates even if the speaker is programmed not to operate.

AS (Armed Status)

Armed Status provides an unsupervised switched ground for a visual or audible armed status indicator that turns on when the burglary areas are armed, such as SYSTEM ON or ALL SYSTEM ON. Connect a wire from the AS Terminal to an armed status indicator.

Caution: Status indicator outputs support a maximum of 100 mA per terminal. Exceeding the maximum rating on LC, RA, or AS terminals can damage equipment.

HID Signo OSDP Card Reader Wiring

When using OSDP mode on a HID Signo card reader, the typical wiring is switched. When using Wiegand mode, the wiring will stay the same.

The HID Signo card reader should be wired as follows:

- Red to Red
- Green to White
- White to Green
- Black to Black

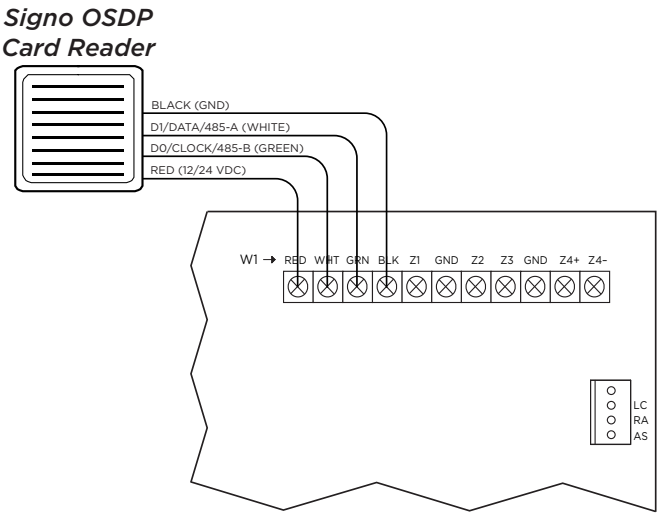

Figure 12: Signo OSDP Card Reader Wiring

7 *Network Connection*

Connect an IP network cable from the LAN/WAN connection to the 734N Network connector. The 734N Series module communicates AES encrypted TCP with panels that have network installed.

Two status LEDs are located on the Ethernet port:

- The green LED indicates that the 734N is connected to network.
- The yellow LED indicates the speed of the transmission. A solid yellow LED indicates the network is connected at 100BASE-T. A flashing yellow LED indicates the network is connected at 10BASE-T.

8 *Set the 734N Address*

Keypad Bus Addresses Explained

DMP XR550 panels use Keypad Bus addresses 2 through 16. XR150 and XT75 panels can only use Keypad Bus addresses 2 through 8. Each Keypad Bus address can accommodate 1 door output and 4 expansion zones. A module with an address of 2 on the Keypad Bus would represent Door 2 and zones 21-24. A module with a keypad address of 14 would represent Door 14 and zones 141-144.

AX-Bus Addresses Explained (XR550 only)

DMP XR550 panels are capable of access control expansion using any of the five AX/LX-Bus headers (AX/LX500, 600, 700, 800, and 900). An AX-Bus address can accommodate 1 door output and 1 expansion zone. Because the 734N Series module has a built-in 4-zone expander, 3 extra zones must be mapped to the 734N. A module with an address of 501 on AX500 would represent Door 501 and zones 501-504. A module with an address of 505 on AX500 would represent Door 505 and zones 505-508. A module with an address of 701 on AX700 would represent Door 701 and zones 701-704.

Note: Hardwired zone expanders and addressable points and modules do not communicate on an AX-Bus. AX-Bus doors do not have programmable device or communication types and do not have assignable display areas.

734N Address Table

Only valid zone numbers can be assigned to access control modules in device setup. For complete keypad and AX-Bus address mapping, refer to the chart below.

Keypad Bus		AX-Bus									
DEVICE/ DOOR	ZONES	DEVICE/ DOOR	ZONES	DEVICE/ DOOR	ZONES	DEVICE/ DOOR	ZONES	DEVICE/ DOOR	ZONES	DEVICE/ DOOR	ZONES
1	11-14	501	501-504	601	601-604	701	701-704	801	801-804	901	901-904
2	21-24	505	505-508	605	605-608	705	705-708	805	805-808	905	905-908
3	31-34	509	509-512	609	609-612	709	709-712	809	809-812	909	909-912
4	41-44	513	513-516	613	613-616	713	713-716	813	813-816	913	913-916
5	51-54	517	517-520	617	617-620	717	717-720	817	817-820	917	917-920
6	61-64	521	521-524	621	621-624	721	721-724	821	821-824	921	921-924
7	71-74	525	525-528	625	625-628	725	725-728	825	825-828	925	925-928
8	81-84	529	529-532	629	629-632	729	729-732	829	829-832	929	929-932
9	91-94	533	533-536	633	633-636	733	733-736	833	833-836	933	933-936
10	101-104	537	537-540	637	637-640	737	737-740	837	837-840	937	937-940
11	111-114	541	541-544	641	641-644	741	741-744	841	841-844	941	941-944
12	121-124	545	545-548	645	645-648	745	745-748	845	845-848	945	945-948
13	131-134	549	549-552	649	649-652	749	749-752	849	849-852	949	949-952
14	141-144	553	553-556	653	653-656	753	753-756	853	853-856	953	953-956
15	151-154	557	557-560	657	657-660	757	757-760	857	857-860	957	957-960
16	161-164	561	561-564	661	661-664	761	761-764	861	861-864	961	961-964

Table 2: Device Addresses and Zone Numbers

9 *Connect the Power Supply*

The device can also be powered by a 12 VDC plug-in power supply (Model 376L) or a 12 VDC external power supply (Model 505-12). When using a plug-in power supply, mount the device near a wall outlet.

1. Remove the housing cover.
2. Install the supplied jumper on the two pins next to EXT on the power source header.
3. Wire the power supply to the DC power terminals by following the power supply-specific instructions below.
4. Snap the cover into place.

Plug-In Power Supply
Connect the black wire with the white stripe to the positive (+) terminal and the solid black wire to the negative (-) terminal. Plug the power supply into an unswitched 110 VAC outlet.

External Power Supply
Use 22 AWG wire to connect the DC power terminal block on the device to the DC power terminal on the 505-12 power supply PCB. Connect the transformer to an unswitched 120 VAC 1.5 Amp power source.

PROGRAM THE PANEL

To access the Programmer menu, reset the panel, enter **6653** (PROG), then press **CMD**.

After completing each of the following steps, press **CMD** to advance to the next option. Refer to the panel programming guide as needed.

```
DEVICE SETUP
```

DEVICE SETUP

Advance to **DEVICE SETUP**, then press a select key or area to enter the setup menu.

```
DEVICE SETUP
DEVICE NO: -
```

Device Number

Set the module's address. For information about valid addresses, refer to Table 2.

```
DEVICE SETUP
*UNUSED*
```

Device Name

Press a select key or area, then enter a name for the module.

```
DEVICE SETUP
TYPE:          DOOR
```

Device Type

Press a select key or area, then select **DOOR** as the device type.

```
DEVICE SETUP
COMM TYPE:   NET
```

Communication Type

Press a select key or area, then select **NET** (Network) as the module communication type.

Configure additional options as needed. To configure specific options for the module locally, do not program **CARD OPTIONS** or **734 OPTIONS** in Device Setup.

PROGRAM THE 734N SERIES MODULE

When you program the 734N Series module, you must use a keypad connected to the programming header and set to address 1. For 12 V applications, connect the keypad to the module using a Model 330 4-wire harness. For 24 V applications, connect the keypad to the module using a Model 330-24 4-wire programming harness with in-line resistor.

Caution: Do not connect a keypad using a standard Model 330 harness if using a 24 V power supply! Damage to the keypad could occur.

You can also program the module from an XR150/XR550 or XT75 panel. If you choose to program the 734N from the panel, all future programming should be performed through the panel. The panel's programming overrides any programming performed from a keypad connected to the 734N. While the module is in programming mode, it will not be able to communicate with the panel.

Caution: OSDP readers can only be programmed locally from the module with a keypad. To properly bond the reader to the module, the 734N must be new or initialized and the reader must be new or factory reset. After programming is complete and the keypad is disconnected, the reader is bonded to the module and cannot be reprogrammed with a different secure key until it is factory reset by the manufacturer.

Reset Header

To reset the module when first installing the system, short the two pins on the reset header before applying power to the module.

To reset the module while the system is operational, short the two pins on the reset header for one or two seconds without powering down the system.

```
734N
VER  VVV  MM/DD/YY
```

734N MENU

When you connect the keypad to the module, the version number and release date display. To access the module Programmer Menu, enter **6653** (PROG).

```
734N
PROGRAMMER
```

PROGRAMMER MENU

Press **CMD** to advance through programmer menu and press a select key or area to enter the appropriate menu: **INITIALIZATION**, **COMMUNICATION**, **ACCESS OPTIONS**, or **STOP**.

```
734N
INITIALIZATION
```

INITIALIZATION OPTIONS

These options set the 734N Series module programming back to factory defaults. Press any select key or area to enter the initialization menu.

INITIALIZATION
COMMS? NO YES

Initialize Communication

Select **YES** to set module communication programming back to factory defaults. Select **NO** to leave communication options unchanged.

INITIALIZATION
SURE? YES NO

Confirm Communication Initialization: The module displays **SURE? YES NO** for confirmation to clear the memory. To leave communication options unchanged, select **NO**. To clear communication programming, select **YES**. No programming is cleared unless you select **YES**.

INITIALIZATION
ACCESS? NO YES

Initialize Access

Select **YES** to set the 734N Series access programming back to factory defaults. Select **NO** to leave access options unchanged.

INITIALIZATION
SURE? YES NO

Confirm Access Initialization: The module displays **SURE? YES NO** for confirmation to clear the memory. To leave communication options unchanged, select **NO**. To clear access options programming, select **YES**. No programming is cleared unless you select **YES**.

734N
COMMUNICATION

COMMUNICATION MENU

Press a select key or area to enter the Communication menu. Press **CMD** to advance to the “Access Options” menu. Press the back arrow to return to “Initialization Options”.

734N DEVICE NO:
7

734N Device Number

Enter a device number for the module. This device number must also be programmed in the panel. The default device number is **7**. For more information about device addressing, refer to Table 2.

734N
DHCP **YES**

734N DHCP

Press a select key or area to choose a setting. Select **YES** to use dynamic IP address information for the module’s IP Address, Subnet Mask, and Gateway Address. Select **NO** to enter static IP information. Default is **YES**.

734N IP ADDRESS:
192.168.0.201

734N IP Address

Press a select key or area to enter the static IP address of the module if the DHCP is set to **NO**. Default is **192.168.0.201.**

SUBNET MASK:
255.255.255.0

Subnet Mask

Press a select key or area to enter the local subnet mask assigned to the module. Default is **255.255.255.0**.

GATEWAY ADDRESS:
192.168.0.1

Gateway Address

Press a select key or area to enter the local gateway address of the module. Default is **192.168.0.1**.

PANEL IP ADDR:
192.168.0.1

Panel IP Address

Press a select key or area to enter the IP address of the panel. Default is **192.168.0.1**.

Note: This IP address must match the address programmed in the panel at the Local IP Address option in Network Options. The DHCP programming in the panel must be set to **NO**.

PANEL IP PORT:
2002

Panel IP Port

Press a select key or area to enter the port number that the module uses to send communication to the panel. This must be the same port that is programmed in the 734N Listen Port in Network Options programming of the panel. The panel IP port cannot be the same as the panel network programming port. Default is **2002**.

```
734N PASSPHRASE:
********
```

734N Passphrase

You must enter an 8-16 character alphanumeric passphrase to encrypt communication with the panel. The 734N passphrase must match the one entered in panel Network Options. The passphrase is blank by default.

```
734N
ACCESS OPTIONS
```

ACCESS OPTIONS

Press any select key or area to enter the Access Options menu. Press **CMD** to advance to “Stop”. Press the Back arrow to return to the “Communication Menu”.

```
READER PROTOCOL
TYPE        WIEGAND
```

Reader Protocol Type

Set the 734N Series to work with Wiegand or OSDP card readers. Press a select key or area to change the module Reader Protocol Type. The default is **WIEGAND**.

```
READER PROTOCOL:
WIEGAND      OSDP
```

If you choose Wiegand, the menu advances to “Activate Zone 2 Bypass”. If you choose OSDP, the menu advances to **LED CONTROL**.

```
LED CONTROL:
            NO   YES
```

OSDP LED Control

Select **YES** to enable reader LED operation. Select **NO** to disable reader LED operation. For more information, refer to “Connect an OSDP Card Reader”.

BUZZER CONTROL:
NO YES

OSDP Buzzer Control

Select **YES** to enable built-in reader annunciation. Select **NO** to disable built-in reader annunciation. For more information, refer to “Connect an OSDP Card Reader”.

SECURE KEY

OSDP Secure Key

The secure key is programmed into the OSDP reader and is used to establish 128-bit AES encrypted two-way communication between the reader and module.

Record this key and store it in a secure location away from the module and reader. After the reader is bonded to the module, the secure key cannot be changed in the reader or retrieved from 734N Series programming. Replacement modules can be bonded to any compatible reader with the reader’s secure key.

Caution: OSDP readers can only be programmed locally from the module with a keypad. To properly bond the reader to the module, the 734N Series must be initialized and the reader must be new or factory reset. After programming is complete and the keypad is disconnected, the reader is bonded to the module and cannot be reprogrammed with a different secure key until it is factory reset by the manufacturer.

```
SECURE KEY
 ****************
```

Press a select key or area to enter a secure key up to 16 alphanumeric characters. These characters are visible until **CMD** is pressed.

```
ACTIVATE ZONE 2
BYPASS?      NO   YES
```

Activate Zone 2 Bypass

Select **YES** to activate the zone 2 bypass operation. Selecting **NO** allows standard zone operation on zone 2. The default is **NO**.

If the door being released by the 734N Series module is protected (contact installed), a programmable bypass entry/exit timer can be provided by connecting its contact wiring to the 734N Series module zone 2. When the onboard Form C relay activates and the user opens the door connected to zone 2, the zone is delayed for the number of seconds programmed in **ZONE 2 BYPASS TIME** allowing the user to enter/exit during an armed period.

If zone 2 does not restore (door closed) within the programmed time, the piezo sounds every other second during the last ten seconds. If zone 2 restores prior to the end of the programmed time, the piezo silences. If the zone does not restore before the programmed time, the module ends the bypass and indicates the open or short zone condition to the panel.

ZONE 2 BYPASS
TIME: **40**

Zone 2 Bypass Time

Enter the number of seconds to elapse before the bypass timer expires. The range is 20 to 250 seconds. Press any select key or area to enter the number of seconds. The default is **40** seconds. Figure 12 shows how the bypass option works.

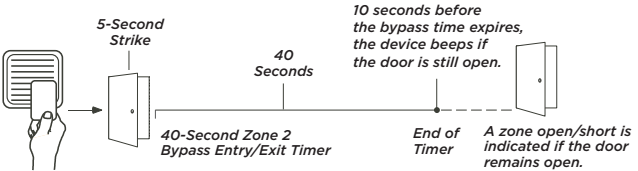

Figure 13: Zone 2 Bypass Timeline

RELOCK ON ZONE 2
CHANGE? **NO** YES

Relock on Zone 2 Change

Selecting **YES** turns the relay off when zone 2 changes state. Selecting **NO** leaves the relay on when zone 2 changes state. Turning off the relay allows a long strike time to be automatically ended upon zone 2 change and relocks the door. The default is **NO**.

ACTIVATE ZONE 3 REX? **NO** YES

Activate Zone 3 Request to Exit

Selecting **YES** activates the zone 3 Request to Exit (REX) option. Selecting **NO** allows standard zone operation on zone 3. Default setting is **NO**.

Connect a motion sensing device or a mechanical switch to zone 3 to provide REX capability to the system. Zone 3 can be used to activate the strike relay and bypass or activate bypass only. For zone wiring details, refer to Figure 8.

Activate Strike Relay and Bypass
Wire zone 3 as normally open with a 1k Ohm EOL resistor.

When zone 3 shorts, the onboard Form C relay activates for the programmed number of seconds. See “Zone 3 REX Strike Time”. During this time, the user can open the protected door to start the programmed zone 2 bypass entry/exit timer. After the programmed number of seconds, the relay restores the door to its locked state.

Activate Bypass Only
Wire zone 3 as normally closed with an in-line 1k Ohm resistor. When zone 3 opens from a normal state, only a bypass occurs and the onboard relay does not activate.

ZN 3 REX STRIKE
TIME: **5**

Zone 3 REX Strike Time

Enter the number of REX seconds to elapse. The range is 5 to 250 seconds. Press any select key or area to enter the number of seconds. The default is **5** seconds.

ACTIVATE ONBOARD
SPEAKER? **NO** YES

Activate Onboard Speaker

Select **YES** to enable the onboard piezo for local annunciation, such as alarm and trouble annunciations. Select **NO** to turn the speaker off for all operations. This does not affect remote annunciator open collector (RA) operation. The default is **NO**.

CARD FORMATS
DMP CUSTOM ANY

Card Formats

Select **DMP** to allow credentials that use a 26 - 45 bit data string. The menu advances to “Require Site Code”.

Select **CUSTOM** to disable DMP format and program slots 1-8 as needed. The menu advances to “Card Format Number”.

Select **ANY** to allow all card reads to activate the door strike relay. The door strike relay is activated for the length of time programmed in **ZN 3 REX TIME**. No user code information is sent to the panel. The menu advances to “No Communication with Panel”.

The default card format is **DMP**.

CARD FORMATS FORMAT NO: -

Card Format Number

Notice: If you see CARD OPTIONS, refer to LT-0737C.

Enter the slot number (1-8) that you want to program for a custom non-DMP card format. The format that is programmed into slot 1 is the default format. In the event that a card with an unrecognized format is used, that card will be read in the format that is programmed in slot 1. To restrict card reads to specific formats, only program slots 2-8.

See "Public Card Formats" for some publicly available card formats that can be used with the 734N. Other private or custom formats may also be compatible. Please contact the credential supplier or manufacturer for the bit structure.

Note: If you select slot 1 and you are upgrading from XR panel version 182 or earlier, **FORMAT NAME** will automatically be named **SINGLE CARD FORMAT** and **WIEGAND CODE LENGTH** will default to 45.

FORMAT NAME
UNUSED

Format Name

Press any select key or area and name the card. Press **CMD** to save and advance.

WIEGAND CODE
LENGTH: **26**

Wiegand Code Length

When using a custom credential, enter the total number of bits to be received in Wiegand code including parity bits.

Press any select key or area to enter a number between 1-255 to equal the number of bits. Default is **26** bits.

An access card contains data bits for a site code, user code, and start/stop/parity bits. The starting position, location, and code length must be determined and programmed into the keypad. See Figure 13.

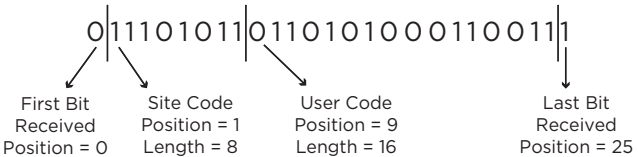

Example: Wiegand Code Length = 26 bits

Figure 14: Wiegand Data Stream Bit Location

SITE CODE
POS: **1** LEN: **8**

Site Code Position and Length

Enter the site code start position and length in the data string. Press select area 2 to clear the site code start position and enter a number between 0-255. Press **CMD** to save. Default is **1**.

Press select area 4 to clear the site code length and enter a number between 1-24. Press **CMD** to save. Default is **8**.

USER CODE
POS: **9** LEN: **16**

User Code Position and Length

Define the user code start bit position and length. Press select area 2 to clear the user code position and enter a number between 0-255. Press **CMD** to save. Default is **9**.

Press select area 4 to clear the user code length and enter a number between 16-64. Press **CMD** to save. Default is **16**.

REQUIRE SITE CODE: **NO** YES

Require Site Code

Press the select key or area under **YES** to use a site code and press **CMD** to view the site code entry display. Press **NO** to advance to “Number of User Code Digits”. Default is **NO**.

In addition to user code verification, door access is only granted when any one site code programmed at the **SITE CODE ENTRY** option matches the site code received in the Wiegand string.

SITE CODE 1:

Site Code Display: You can program up to eight 8-digit site codes. The site code range is 0 - 16777214.

In the keypad display, enter site code 1 and press **CMD**. The display will ask for site code 2 followed by site code 3 and so on. When you have selected the site code you want to change, press **CMD.**

NO OF USER CODE DIGITS: **5**

Number of User Code Digits

The 734N module recognizes user codes from 4-12 digits long. Press any top row select key or area to enter a user code digit length. This number must match the user code number length being programmed in the panel. The device will recommend a number of user code digits based on the user code length. Default is **5**.

All bits are read and converted into a decimal number string. The number string is left padded with 0 (zero) if needed for long user code lengths.

Example:

# decoded	1234567
10 digits	0001234567
4 digits	4567

CARD FORMATS
26 BIT ADDED

Card Format Added/Changed (Custom Format)

When a custom card format is added successfully, the keypad displays *xx* **BIT ADDED**, where *xx* is the Wiegand code length. When the format is changed, the keypad displays *xx* **BIT Changed**. Press **CMD**. The menu returns to "Card Format Number". Program another custom card format or press **CMD** to advance to **NO COMM WITH PNL**.

NO COMM WITH PNL
OFF

No Communication with Panel

Define the relay action when communication with the panel has not occurred for 5 seconds: **OFF**, **SITE**, **ANY**, **ON**, or **LAST**. Default is **OFF**. Press any select key or area to change the default relay action:

OFF SITE ANY ON

Press the first select key or area to choose **OFF** (Relay Always Off). The relay does not turn on when any Wiegand string is received. **OFF** does not affect any REX operation. If communication is lost during a door strike, the relay remains on for the door strike duration but turns off at the end of the door strike timer.

OFF SITE ANY ON

Press the second select key or area to choose **SITE** (Accept Site Code). Door access is granted when the Wiegand site code string received matches any site code programmed at Site Code. Refer to “Require Site Code” for more information.

OFF SITE ANY ON

Press the third select key or area to choose **ANY** (Any Wiegand Read). Access is granted when any Wiegand string is received.

OFF SITE ANY ON

Press the fourth select key or area to choose **ON** (Relay Always On). The relay is always on.

LAST

Press **CMD** to display additional actions. Press the first select key or area to choose **LAST** (Keep Last State). The relay remains in the same state and does not change when communication is lost.

734N STOP

STOP

Press any select key or area to initiate the stop routine. When programming is saved successfully, **STOP** displays and the module returns to the main 734N Menu. Test the module or remove the keypad harness to disconnect the keypad.

TEST THE 734N SERIES MODULE

```
734N
VER  VVV  MM/DD/YY
```

734N MENU

When you connect the keypad to the module, the version number and release date display. Press **CMD** to enter the Diagnostic Menu.

```
MENU?        NO   YES
```

Diagnostics Menu

Select **YES** to display Panel Communication Connect Status. Select **NO** to return to “734N Menu”.

```
CONNECT STATUS
```

Connect Status

To display the status of connection with the panel, press any top row key or select area.

```
XMIT TIME XXX MS
```

Transmit Time: The speed of the last transmission and acknowledgment in milliseconds displays if a connection to the panel over the network has been established.

Note: XXX represents the potential number of milliseconds that may appear. 0 is not an indication of failure to transmit.

```
NOT CONNECTED
```

Not Connected: The 734N cannot establish a connection to the panel over the network.

BAD PASSPHRASE	*Bad Passphrase*: The passphrase programmed into the 734N does not match the passphrase programmed into the panel.
DEVICE NOT PROG	*Device Not Programmed*: The device number is not programmed into the panel.
DUPLICATE DEVICE	*Duplicate Device*: There is another device on the network with the same device number.

Zone Status Display

Enter a zone number then press **CMD** to display its status. To display another zone, enter the zone number and press **CMD**. If the zone number entered isn't programmed, the keypad displays **INVALID ZONE NO**.

```
734N
ZONE: 1     -OKAY
```

```
734N
ZONE: 2     -OPEN
```

```
734N
ZONE: 3     -SHORT
```

COMPATIBILITY

Wiegand
XR150/XR550 Control Panels

XT75 Control Panels

OSDP
XR150/XR550 Control Panels

XT75 Control Panels

734N/734N-POE modules with firmware Version 104 (12/9/19) and Hardware Level 103

Public Card Formats

CARD FORMAT	WIEGAND CODE LENGTH	SITE CODE POSITION	SITE CODE LENGTH	USER CODE POSITION	USER CODE LENGTH	USER CODE DIGITS
H10301 26-Bit	26	1	8	9	16	5
H10302 37-Bit w/o FAC	37	0	1	1	35	11
H10304 37-Bit w/ FAC	37	1	16	17	19	6
Farpointe 39-Bit	39	1	17	18	20	7
Corporate 1000 35-Bit	35	2	12	14	20	6
Corporate 1000 48-Bit	48	2	22	24	23	7
DMP Bluetooth 56-Bit	56	1	16	17	34	10

Readers and Credentials

125 kHz WIEGAND READERS	
P-300	Cascade Proximity Reader
P-500	Alps Proximity Reader
P-620	Denali Proximity Reader With Keypad
P-640	Patagonia Proximity Reader With Keypad
MP-5365	MiniProx™ Proximity Reader
MX-5375	MaxiProx® Proximity Reader
PP-6005B	ProxPoint® Plus Proximity Reader
PR-5355	ProxPro Proximity Reader With Keypad
PR-5455	ProxPro® II Proximity Reader
TL-5395	ThinLine II® Proximity Reader
SR3	Bluetooth and Proximity Reader

125 kHz PROXIMITY CREDENTIALS	
PSC-1	Standard Light Proximity Card
PSK-3	Proximity Key Ring Tag
PSM-2P	ISO Imageable Proximity Card
1306	Prox Patch™
1326	Proxcard II® Card
1346	ProxKey III® Access Device
1351	ProxPass®
1386	IsoProx II® Card

BLUETOOTH MOBILE CREDENTIALS
Mobile Credentials (SR3)

13.56 MHz WIEGAND SMARTCARD READERS	
DELTA3*	Mullion Mount Smartcard Reader
DELTA5*	Single-Gang Box Mount Smartcard Reader
DELTA6.4*	Smartcard Reader With Keypad
CSR-35P	Bluetooth Smartcard Reader

13.56 MHz OSDP SMARTCARD READERS	
DELTA3-OSDP*	Mullion Mount OSDP Smartcard Reader
DELTA5-OSDP*	Single-Gang Box Mount OSDP Smartcard Reader
DELTA6.4-OSDP*	OSDP Smartcard Reader With Keypad
CSR-35P-OSDP	Bluetooth OSDP Smartcard Reader

13.56 MHz SMARTCARD CREDENTIALS	
DE2	MIFARE® DESfire® EV2 Smartcard
CSK-2	MIFARE® DESfire® EV2 Key Fob Smartcard

OSDP capability for 734 modules was designed and tested with Farpointe readers. Other reader brands may be usable, but have not been tested with 734 modules and are not deemed compatible.

*Delta Proximity Readers and Credentials not evaluated by UL.

PRODUCT SPECIFICATIONS

Primary Power	8.5 VDC to 28.5 VDC if 12/24 VDC Reader Output at 12 VDC: 10.12 - 13.13 VDC Reader Output at 24 VDC: 20.23 - 26.28 VDC
Current Draw	
Standby	346 mA at 12 VDC (includes 200 mA for proximity reader) +1.6 mA per active zone
Alarm	348 mA at 12 VDC (includes 200 mA for proximity reader) +10 mA with Annunciator ON +2 mA per faulted zone
Form C Relay	35 mA at 12/24 VDC
Output 1 and 2	12.5 mA at 12 VDC
When powered from POE	
Standby	243 mA (includes 200 mA for proximity reader) +1.6 mA per active zone
Alarm	273 mA (includes 200 mA for proximity reader) +10 mA with Annunciator ON +2 mA per faulted zone

Class (POE)	Class 0 - Mode B (0.44 Watts to 12.95 Watts)
Output Voltage (POE)	12 VDC
Maximum Power Draw (POE)	12.95 W
Total Available Output Current	750 mA
Zones	5 VDC, 2 mA max
Dimensions	4.5 W x 2.75 H x 1.75 D in (11.43 W x 7 H x 4.45 D cm)
Weight	8 oz (0.23 kg)

COMPLIANCE LISTING SPECIFICATIONS

UL Access Control

The access relay must be configured as fail-safe or fail-secure as determined by the local Authority Having Jurisdiction (AHJ). This system is not intended to be used in place of listed panic hardware.

For listed installations, the 734N or 734N-POE must be installed within the protected area.

The power supply must be a listed commercial burglary/household fire, power limited, Class 2 with a compatible voltage range for the product. The 734N requires a 12 or 24 VDC power source. The 734N-POE can be powered by a 12 or 24 VDC or UL 294 listed POE switch.

For UL Access and Commercial Burglary, the 734N-POE must be installed inside a UL listed DMP metal enclosure such as a Model 341. Refer to Mount the Device for mounting instructions.

POE power to be supplied by a UL 294 Listed, power limited, injector providing 44-57 VDC and 15.40 W for maximum output (POE).

POE power to be supplied by a UL 294 Listed, power limited, injector providing 50-57 VDC and 30.0 W for maximum output (POE+).

POE power to be supplied by a UL 294 Listed POE+ Midspan or Endspan providing 44-57 VDC and 30 W for maximum output.

This product is not intended for outside wiring as covered by Article 800 in the National Electrical Code, NFPA 70.

Category 5e cabling is minimum performance category recommended. The performance category utilized should match the transmission speed required at the installation site.

Compliance with IEEE 802.3 (at or af) specifications was not verified as part of UL 294B.

The equipment is intended to comply with the following sections of the National Electrical Code, ANSI/NFPA 725.121.

The minimum conductor gauge permitted to connect between the PSE or power injector and the PD shall be 26 AWG (0.13 mm^2) for patch cords; 24 AWG (0.21 mm^2) for horizontal or riser cable.

Use Cat 5 568-B wiring for connections. See Figure 14.

The equipment shall be provided with information concerning the power sourcing equipment (PSE) connector configuration (for example, Alternative A or Alternative B or both), and the maximum power class supported by the PSE.

The 734N-POE is compatible with the Altronix Netway 1.

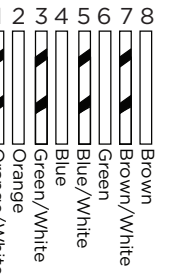

Figure 15: Cat 5 568-B Wiring

ULC Commercial Burglary (XR150/XR550 Series Panels)

When using the zones of the 734N in a listed application, place the module in a listed enclosure and connect a DMP Model 307 Clip-on Tamper Switch to the enclosure programmed as a 24-Hour zone.

The 734N Access Control features have not been investigated by ULC.

The 734N zones can be used in a Low Risk application. For Medium or High Risk applications, refer to the Dual Zone Protection diagram in the XR150/XR550 Canadian installation guide.

734N SERIES NETWORK SPECIFICATIONS

The 734N Series was designed to have minimum impact on network performance. The modules are supervised in the panel by exchanging two data packets every five seconds. The payload of the data packets exchanged between the XR150/XR550 or XT75 panels and the modules is a very small 18 bytes. The total traffic for all supervision, including network overhead, is roughly two kilobytes per minute per module. This would be equivalent to a very small email message.

If required, all of the traffic between the modules and the panel can be completely isolated from the rest of the existing network by connecting all of the modules and the panel to the same switch, then connecting the switch to the remainder of the network. All traffic between the modules and the panel would then be confined to the switch where they are connected, while still allowing the panel to communicate with the central station through the normal network.

The security of the modules is multi-faceted. Most importantly, 734N Series modules are single purpose network devices. All of the ports in the TCP/IP stack used in the modules are disabled and allow no inbound connections. This prevents a potential intruder from making any type of connection with the modules through the network. The modules communicate with the control panel by establishing an outbound only connection to the panel. All communication between the modules and the control panel is encrypted using 128-bit AES encryption. This is the same encryption standard approved and used by the U.S. government, including the National Security Agency for encrypting secret information.

734N Series encryption has not been evaluated by UL.

Packet Communication

- The module establishes panel communication using the TCP/IP protocol.
- At start up, the module opens a TCP/IP connection that remains open indefinitely.
- The socket can be closed by the module or panel after a time-out.
- The connection is re-established by the module after the time-out.
- A pair of supervision packets are sent every 5 seconds.

  - The payload for each packet is 18 bytes and the total traffic, including overhead, is approximately 2 kilobytes per minute for each 734N Series module.

  - Non-Supervision messages have a payload range of 18-50 bytes.

CERTIFICATIONS

FCC Part 15
California State Fire Marshal (CSFM)
NIST AES Algorithm Certificate #1937

Underwriters Laboratory (UL Listed)

734N

ANSI/UL 294	Access Control System Units
Level I	Destructive Attack, Line Security, and Standby Power
Level IV	Endurance
ANSI/UL 609	Local Burglar Alarm Units And Systems
ANSI/UL 1076	Proprietary Burglar Alarm Units And Systems
ANSI/UL 1023	Household Burglar-Alarm System Units
ANSI/UL 1610	Central Station Burglar-Alarm Units
ULC S304	Central And Monitoring Station Burglar Alarm
ULC/ORD-C1076	Proprietary Burglar
ULC Subject-C1023	Household Burglar

734N-POE

ANSI/UL 294	Access Control System Units
Level I	Destructive Attack, Line Security, and Standby Power
Level IV	Endurance
ANSI/UL 609	Local Burglar Alarm Units And Systems

ANSI/UL 1076	Proprietary Burglar Alarm Units And Systems
ANSI/UL 1610	Central Station Burglar-Alarm Units

 © 2026 Digital Monitoring Products, Inc.